FUJI ELECTRIC

注意此使用说明书请必须交至最终用户和维修责任者。

使用说明书　INA-F0197-CE

机械锁扣形交流接触器

型号
SC-E2S/VS
SC-E4/VS

安全注意事项

在安装、运行、保养和维修前必须熟读使用说明书，以保证正确使用。
使用说明书中对安全注意事项区分为“危险”、“注意”两个等级。

⚠危险：指在由于错误的使用而引发的危险情况下有可能导致死亡或重伤的场合。

⚠注意：指在由于错误的使用而引发的危险情况下有可能导致中等程度的伤害或轻伤的场合，以及只会发生物体损坏的场合。

并且，即使在⚠注意中记载的事项根据情况也有可能导致发生重大事故，所以记载内容都很重要，请必须遵守。

⚠危险

- 请不要触摸和靠近通电中的产品，因有触电、灼伤的危险。
- 维修、检验请在切断电源后进行，因有触电的危险。
- 在通电中绝对不允许进行手动操作。因有触电的危险。

⚠注意

- 因为有引发灼伤、火灾的可能，所以请确保说明书上规定的安装空间。
- 因为有引发火灾的可能，所以请在接线时按额定电压、通电电流选用符合规范尺寸的电线，紧固螺钉按照使用说明书规定的力矩紧固。
- 请不要在切断电源后立即触摸产品，因为余热可能会导致烫伤。
- 锁扣单元（图 8）与交流接触器是在工厂内进行调整后出厂的，所以请不要进行拆卸或者更换。
- 装置有整流器单元（图 8）的场合，请不要进行拆卸。
- 产品废弃时需按产业废弃物处理。

1. 解开包装

- 请确认产品型号及适用容量与要求的规格是否一致。
- 请检查是否有由于运输过程中等原因而引起的零部件松动或破损现象。

2. 保管

请避免高温多湿、有腐蚀性气体及日光直射的场所，以原包装的状态进行保管。

3. 安装

(1) 请安装于干燥、洁净、牢固的场所。
(2) 请在垂直面安装，允许倾斜角度在 30° 以内。（图 1）
(3) 导轨安装型可装于 35mm 安装轨上(符合 IEC60715)。
(4) 推荐使用本公司的型号为 TH35-15AL 的导轨。安装轨平面布置见(图 2)、安装・拆卸请看(图 3)。
(5) 即使有 4 个安装孔，也只选取对角线上的两个孔进行安装。(图 4)

4. 安装空间（图 5、图 6）

(1) 安装间隙需在下表尺寸以上。

A 尺寸[mm]	B 尺寸[mm]	C 尺寸[mm]
0	10	2

(2) 交流接触器紧密安装时（连续通电和高频通断的产品视同紧密安装），根据使用条件有可能因温度上升而造成线圈寿命降低。在此种条件下使用时，推荐使用时产品间的间距大于 5mm。

5. 接线

(1) 电线尺寸及紧固力矩

型号				SC-E2S/VS	SC-E4/VS
主回路	单芯线・多股线【注 1】		[mm²]	0.75～35	1.5～70
	多股软线（有压接端子）		[mm²]	0.75～25	1.5～50
	多股软线（无压接端子）		[mm²]	0.75～25	1.5～50
	电线剥皮尺寸		[mm²]	15	20
	单芯线・多股线【注 1】		[mm²]	0.75～25	1.5～50
	多股软线（有压接端子）		[mm²]	0.75～16	1.5～35
	多股软线（无压接端子）		[mm²]	0.75～16	1.5～35
	电线剥皮尺寸		[mm]	13	16
	单芯线・多股线【注 1】	上	[mm²]	0.75～25	1.5～50
		下		0.75～25	1.5～50
	多股软线（有压接端子）	上	[mm²]	0.75～16	1.5～35
		下		0.75～16	1.5～35
	多股软线（无压接端子）	上	[mm²]	0.75～16	1.5～35
		下		0.75～16	1.5～35
	紧固工具【注 2】			⊕⊖	⬡
	紧固力矩		[N·m]	2.5	8
	松开力矩【注 3】		[N·m]	1	2

控制回路・辅助回路	单芯线・多股线【注 1】【注 4】多股软线(有压接端子)	[mm²]	1×(0.75～2.5) 2×(0.75～1.5) 2×(1.5～2.5)
	电线剥皮尺寸	[mm]	10
	端子螺钉尺寸		M3.5
	紧固工具【注 2】		⊕⊖
	紧固力矩	[N·m]	0.8～1

【注1】・多股线在 0.75～35mm²的场合：多股线单丝根数不大于 7
・多股线在 50～70mm²的场合：多股线单丝根数不大于 19
・多股软线：可多于上述单丝根数多股线

【注2】⊕:菲利普 H 型 2 号
⊖:I 型螺丝刀 I-1×5.5×L 式 B
⬡:内六角扳手(4mm)　⬡ 4

【注3】在插入电线时需要松开紧固螺钉，当螺钉下面附带的压紧块（防脱落功能）接近接线端子上端时就不要再拧松了。请务必注意，在这种状态下如果松开力矩超过上表所示数值，压紧块就会脱落或者造成端子破裂。

【注4】多股软线若无压接端子就不能使用。在使用多股软线的时候，用压接端子压接进行使用。

【注5】不接线的端子螺钉，也应全部紧固后使用。

【注6】接线后，对连接电线进行整理时，若发生折弯现象，请再次确认紧固力矩。

6. 操作

6.1 电气性

(1) 请给与闭合指令及脱扣（释放）指令 0.3 秒以上。
(2) 闭合线圈及脱扣线圈，为短时工作制 15 秒。请串联连接闭合线圈及线圈消磁触头（端子 No55-56）。(不要拆下连接线)
脱扣线圈利用内置触头消磁。
(3) 闭合指令(ON)与脱扣指令 (OFF)的执行时间不允许重叠。
如重叠会造成触头颤振、线圈烧损等状况发生。

6.2 顺序检查

在动作指示块的位置能够确认动作状态。（图 7）
手动闭合・手动脱扣请按照图 8 的方法进行。
顺序检查不能在带载的情况下（负载被连接的状态）进行。

7. 维修・保养

(1) 请确认控制回路电压在控制线圈电压的允许变动范围内。
(2) 端子的紧固螺钉请定期重新紧固。
(3) ＡＣ操作时，请确认电压波形是否无畸变。（频率 50Hz 或 60Hz）

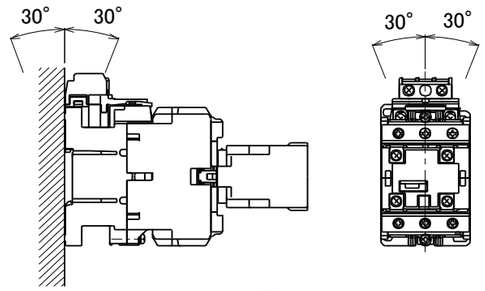

图 1

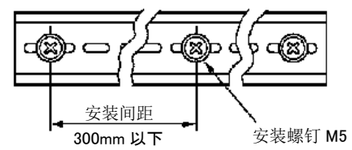

图 2

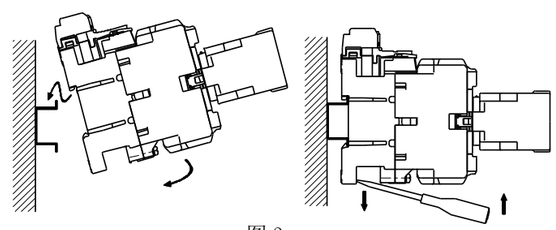
图 3

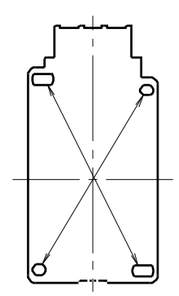
图 4

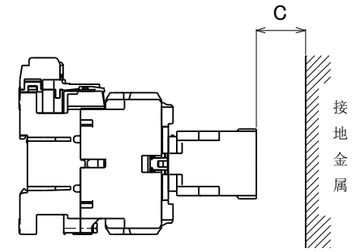

图 5

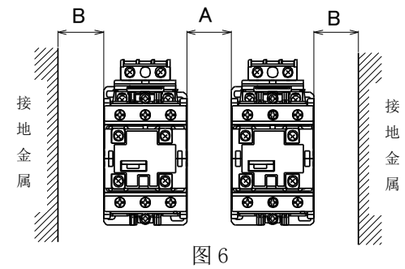

图 6

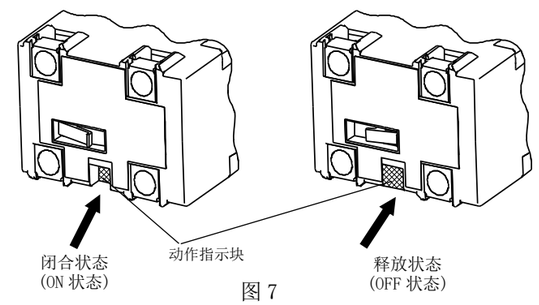

图 7

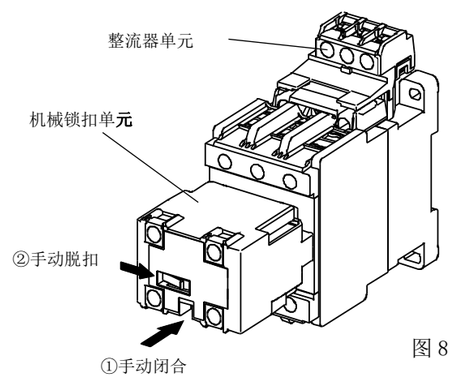

图 8

常熟富士电机有限公司
地址：中国江苏省常熟市东山路１８号
电话：0512-52845623　52845643

F06466853

FUJI ELECTRIC

This manual should be given to the person who actually uses the products and is responsible for their maintenance.

INSTRUCTION MANUAL INA-F0197-CE

Mechanical latch Magnetic Contactor

Type

SC-E2S/VS
SC-E4/VS

Safety Precautions

To ensure proper use of the product, be sure to read this manual and the other attached documents carefully before starting installation, operation, maintenance and inspection. Within this instruction manual, safety precautions are ranked, in order of importance, as either"Warning" or "Caution".

⚠ WARNING	An operator may be killed or seriously injured by a hazardous condition resulting from improper operation.
⚠ CAUTION	An operator may suffer minor injuries and/or objects may be damaged by a hazardous condition resulting from improper operation.

Under certain conditions, improper operation may result in serious injury and/or damage even if it is labeled only as "Caution". Every item indicated by either "Warning" or "Caution" should be considered significant. Be sure to give particular care to those items.

⚠ WARNING

- Do not touch the product or approach it when power connected.
  Electric shock or burns may result.
- Turn off the power before starting maintenance or inspection. Failure to turn off power may result in Electric shock or burns.
- Do not perform manual operation when power connected.

⚠ CAUTION

- For wiring, select wire sizes suitable for the applied voltage and current.
- Tighten wires with the tightening torque specified in the instruction manual.
  Failure to do so may result in fire.
- Do not touch the product immediately after the power is turned off.
  As it may still be hot, burns may result.
- Do not detach the mechanical latch unit from the contactor. (Fig.8)
- When the rectifier unit is attached to the product, do not use it with removal. (Fig. 8)
- Treat the product as industrial waste when discarding.

1. Unpacking

(1) Check that the type, coil voltage, and applicable capacity match the requested specifications.
(2) Make sure that no parts have been lost or damaged.

2. Storage

Store the unit in the packing box. Do not store the packing box in a location subject to high temperature, high humidity, corrosive gas, or direct sunlight.

3. Mounting

(1) Mount in a dry, clean and stable location.
(2) Mounting on a vertical surface. The product must not incline more than 30° . (Fig. 1)
(3) The rail mounting type can be attached on a standard 35mm IEC60715 mounting rail.
(4) Fuji type TH35-15AL mounting rail is recommended. Mounting of the rail on the panel (Fig.2) Attachment and removal (Fig.3)
(5) Even if the product is provided with four mounting holes, use any two mounting holes on a diagonal line. (Fig.4)

4. Mounting space (Fig. 5, Fig. 6)

(1) Mount the products at a distance of at least that shown in the table below.

A [mm]	B [mm]	C [mm]
0	10	2

(2) When units must be installed very closely, the temperature may rise in some conditions (i.e. the power is continuously supplied for a long time or units that frequently do switching are installed very closely), and it may shorten the life of the coil. Thus, when installing units very closely, it is recommended to install the units 5 mm or more apart.

5. Connection

Wire size and proper tightening torque.

Main terminals

Types				SC-E2S/VS	SC-E4/VS
	Solid Stranded【Note 1】		[mm²]	0.75 to 35	1.5 to 70
	Flexible stranded with end sleeve		[mm²]	0.75 to 25	1.5 to 50
	Flexible stranded without end sleeve		[mm²]	0.75 to 25	1.5 to 50
	Stripped length		[mm²]	15	20
	Solid Stranded【Note 1】		[mm²]	0.75 to 25	1.5 to 50
	Flexible stranded with end sleeve		[mm²]	0.75 to 16	1.5 to 35
	Flexible stranded without end sleeve		[mm²]	0.75 to 16	1.5 to 35
	Stripped length		[mm]	13	16
	Solid Stranded【Note 1】	FRONT	[mm²]	0.75 to 25	1.5 to 50
		BACK		0.75 to 25	1.5 to 50
	Flexible stranded with end sleeve	FRONT	[mm²]	0.75 to 16	1.5 to 35
		BACK		0.75 to 16	1.5 to 35
	Flexible stranded without end sleeve	FRONT	[mm²]	0.75 to 16	1.5 to 35
		BACK		0.75 to 16	1.5 to 35
Tighten tool【Note 2】				⊕⊖	⬡
Tightening torque			[N·m]	2.5	8
Loosening torque【Note 3】			[N·m]	1	2

Control terminals and Aux. Terminals

Solid Stranded Flexible stranded wire with end sleeve 【Note 1】【Note 4】	[mm²]	1×(0.75 to 2.5) 2×(0.75 to 1.5) 2×(1.5 to 2.5)
Stripped length	[mm]	10
Terminal screw size		M3.5
Kinds of screw【Note 2】		⊕⊖
Tightening torque	[N·m]	0.8 to 1

【Note 1】Stranded wire(0.75 to 35 [mm²]) : Number of solids ≦ 7
Stranded wire(50 to 70 [mm²]) : Number of solids ≦ 19
Flexible stranded wire : Number of solids > 7

【Note 2】⊕:Philips PH2 φ6
⊖:Slotted-head screw I- 1×5.5×L Type B
⬡:Hexagon socket screw key

【Note 3】When an electrical wire is inserted, a tightening bolts is loosened. In that case, don't loosen it any further if the metal fittings attached under the tightening bolts is raised to the top end of the terminal. Be careful that material fitting may come off when the power is added beyond the torque mentioned in the table.
Do not tighten screws counterclockwise strongly further the loosening torque in above table, or terminals may be broken.

【Note 4】Flexible stranded wire without end sleeve is not applicable.
Use flexible stranded wire with end sleeve.

【Note 5】Tighten all terminal screws even if not used.

【Note 6】After alignment or bending back of connected leads, check the tightening torque of the clamping screws.

6. Operating notes

6.1 Electrical

(1) The electrical signal time for closing and tripping should be 0.3sec. or more.
(2) Tripping coil is short time rating(15-seconds rating).Be sure to use a tripping coil through a contact (terminal No 55-56). (Do not use without the wire between terminal No.56 to A2.)
(3) Please give as a circuit which does not make directions of closing and tripping simultaneous.

6.2 Sequence operating check

Operation indicator shows contactor operates or not. (Fig. 7)
The manual operation method is shown in Fig. 8.
When carrying out a sequence operating check make sure that the load circuit is open.

7. Maintenance and Inspection

(1) Check that the operating voltage is within the allowable fluctuation range, 85 to 110% of the coil voltage before operation.
(2) Check that all terminals are tightened with the proper torque periodically.
(3) In AC operation, check that operation power supply is sinusoidal waveform (50Hz and 60Hz) without distortion or cave-in etc.

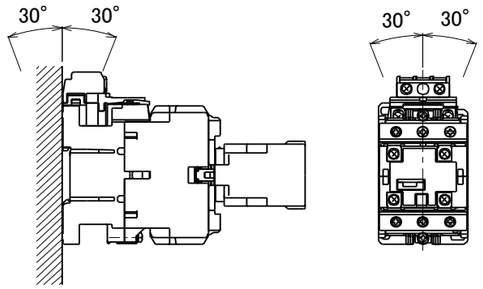

Fig.1

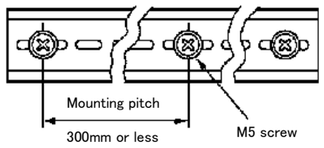

Fig.2

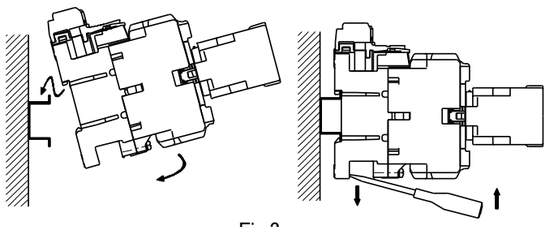

Fig.3

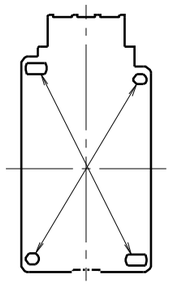

Fig. 4

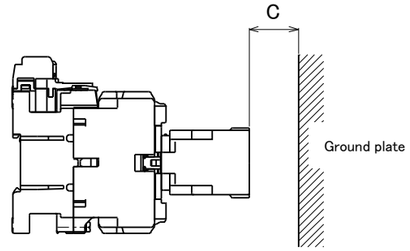

Fig. 5

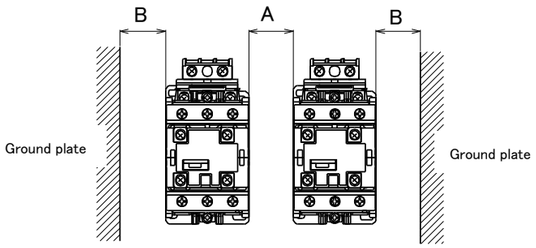

Fig. 6

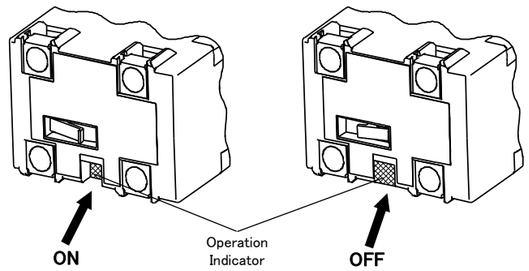

Fig.7

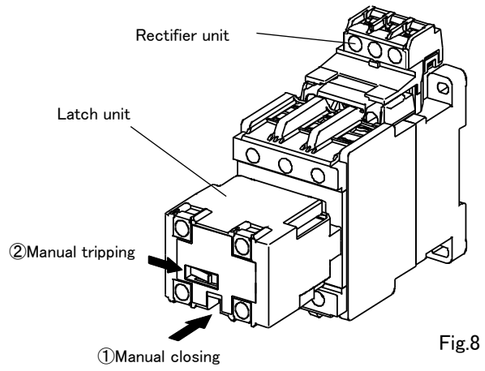

Fig.8

Fuji Electric (Changshu) Co., Ltd.
No.18, Dongshan Road, Yushan Industrial Zone, Changshu City, Jiangsu Province, China
Phone : 0512-52845642 52845643

F06466853